Yoswit Smart Light Controller Datasheet

Model: YO2061-2G (R2W) Revised: 01-12-2024





Effortless Smart Control for Mechanical Switches

Yoswit Smart Light Controller features a mini design that fits into mechanical Light switches, transforming them into smart devices without replacement. Schedule Lighting effortlessly with the built-in timer and enjoy remote control before arrival, along with smart speaker integration via the built-in Wi-Fi. It seamlessly connects with other Yoswit products through our Yoswit App, simplifying interaction with your smart devices.

Connection:

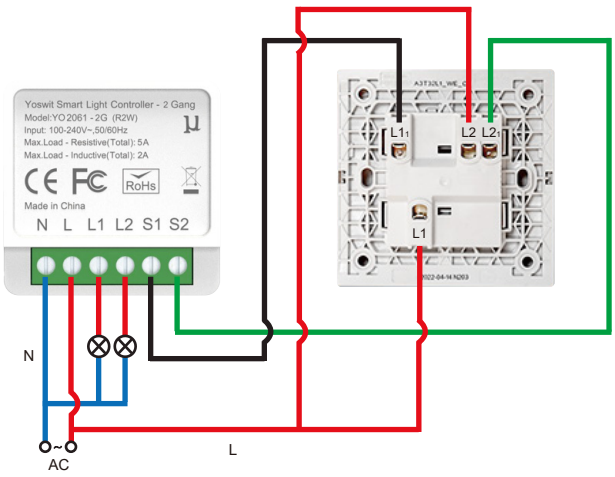

Key Features and Benefits

- Converts Mechanical Switches into Smart Devices
- Outdoor Remote Control with Built-In Wi-Fi
- Smart Speaker Integration
- Connects with the Entire Family of Yoswit Products via the Yoswit App
- Built-In Timer for Automation

Various Customized Products

We offer a comprehensive selection of smart home products that are seamlessly adapted to the usage standards and various socket types in different countries, ensuring a smooth installation process for all users. With extensive compatibility, our products enable you to control a diverse range of household appliances, including lighting, air conditioning, and TV.

Light Switch | Dimmer Switch | 2 Way Switch | Double Pole Switch | Gate Controlled Switch | Hidden Controlled Switch | Outlet | Roller | Curtain | Remote Control | Thermostat

Yoswit App

You can download our app to implement the following functions via Bluetooth and WiFi to control the Yoswit switches.

SCAN THE QR CODE TO DOWNLOAD
YOSWIT APP

Time Setting | Scene Mode | Device Network | Away Detection | Password Protection | Network Control | Apple Siri | Google Assistant | IFTTT

Depends on Yoswit Bridge Solutions.

Product Specifications

Color Option:

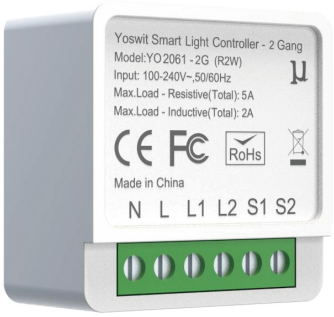

Specifications:

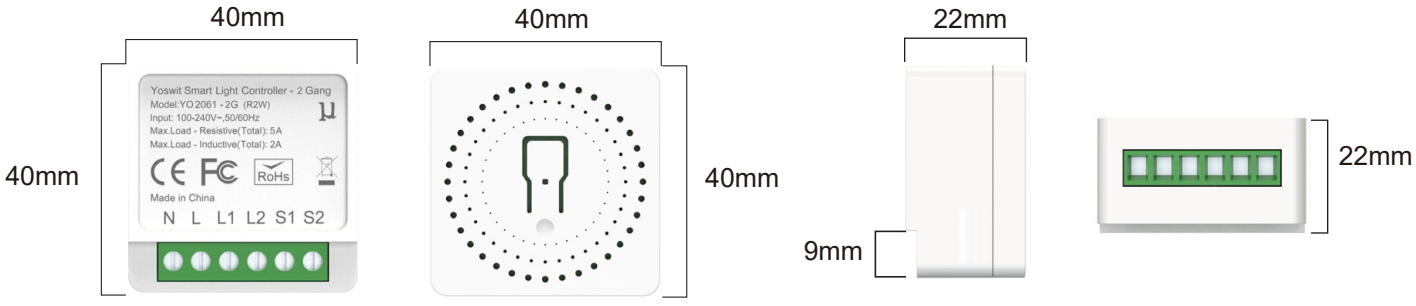

Electrical	
Operation Power	100-240V AC (50/60Hz)
Power Consumption	≤1W
Max. Load	5A

Wireless	
Frequency	2.4GHz
Connection	BLE 4.2 / WIFI 2.4G
Range	Open Area: >50m / Interior: 3-20m

General Specifications

Product Name	Yoswit Smart Light Controller / 2 Gang
Model	YO2061-2G (R2W)
EAN / UPC	EAN: 0765756496773 / UPC: 765756496773
Revision	V1.0
Compliance	CE, FCC, RoHS
Manufacturer	Designed by Yoswit in Hong Kong, China / Assembled in Guangdong, China
Warranty	Two Year Limited Warranty (*Details available on the Product Warranty and Limitations of this datasheet)

Mechanical

Operating Temperature	-10°C to 40°C
Operating Humidity	0-95% RH, Non-Condensing
Operating Environment	Interior
Operation	APP
Ingress Protection (IP)	20

Product Package

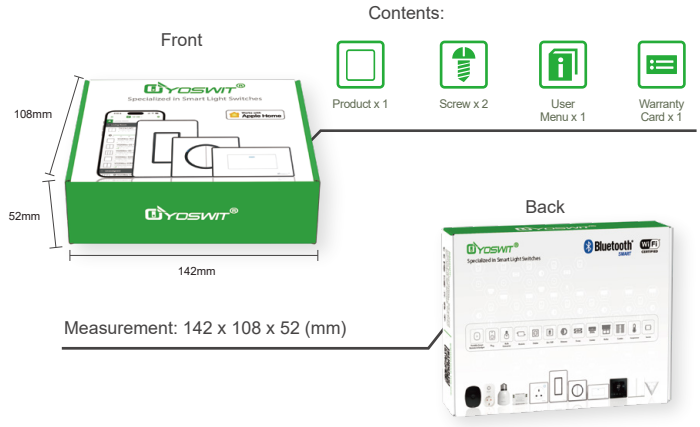

Outer Box



Quantity Per Box: 40 Pack / Box
Measurement: 58 x 31 x 23.5 (cm)

Product Warranty and Limitations

Yoswit brand products guarantee for a period of 2 years warranty from the date of purchase. During the warranty period and in the event that a defective product is identified (non-human factors), Yoswit will provide free maintenance. Damage beyond the warranty period or caused by improper use is not covered within the warranty, Yoswit will not bear any responsibility for repair, and will still provide users with a lifelong maintenance of paid services. If the products need to be repaired or returned to our company, an appropriate fee should be charged based on specific situation to cover the cost of replacement. Regardless of the warranty status, all shipping costs are borne by users.

LINCOGN TECHNOLOGY CO. LIMITED

Address: Room 202, 2/F, Building No. 19 West Science and Technology Avenue, Science Park, Shatin, N.T., Hong Kong
info@yoswit.com | Tel: (852) 3996 9396 | Fax: (852) 3119 8778 | www.yoswit.com